ELECTRO-OPTICS

FOXTROT2™

PISTOL MOUNTED WHITE LIGHT

OPERATOR'S MANUAL

SIG SAUER

TABLE OF CONTENTS

Introduction 3
Contents: 4
Key Features: 5
Product Identification: 6
Battery Installation/Change 7
Selecting The Proper Rail Interface Insert 9
Paddle Installation 13
Installation 17
Operation 21
Cleaning and Maintenance 23
Specifications 24
Sig Sauer Electro-Optics Infinite Guarantee ®/Limited Lifetime Warranty 26

Please visit sigsauer.com for Operator's Manual downloads.

INTRODUCTION

The FOXTROT2™ is a compact yet powerful pistol mounted white light that is perfect for concealed carry, home defense and duty use. The FOXTROT2 is compatible with any firearm that uses a MIL-STD 1913 rail, as well as many other pistols on the market.

The FOXTROT2 is covered by the SIG SAUER Electro-Optics Infinite Guarantee and Electronics Component Limited 5-Year Warranty.

CONTENTS:

- FOXTROT2™ Tactical White Light
- CR123A Lithium Battery
- 4 Pairs of Paddles for User Configurable Activation
- 2 Rail Interface Inserts
- 2 Paddle Screws
- 3 E-Clips
- Torx™ T8 Wrench
- E-Clip Removal/Installation Tool

KEY FEATURES:

- 580 Lumens
- 13,000 Candela
- 1 Hour of Runtime
- Activation is Programmable, Three Separate Modes Chosen by the User
- Ambidextrous Activation Paddles with Momentary Mode, Latching Mode, and Threshold Mode
- Runs on 1 x CR123A Lithium Battery
- Compact 6061 Aluminum Housing
- User Configurable Paddles for Switch Activation
- Lockout Mode
- 4-Position Sliding Rail Interface Inserts for Maximum Adjustment Range on the Firearm

PRODUCT IDENTIFICATION:

A. Bezel
B. Cross Bolt
C. Activation Switch
D. E-Clip
E. Rail Mount Keeper
F. Rail Interface Insert

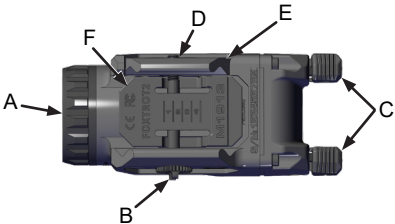

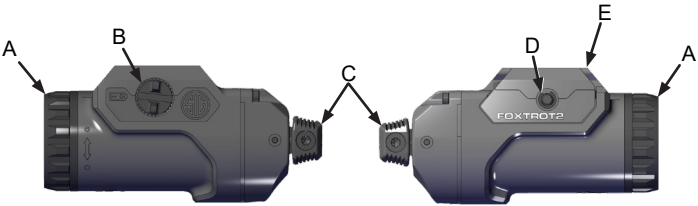

WARNING UNLOAD/CLEAR

PRIOR TO INSTALLATION, BATTERY CHANGE, OR MAINTENANCE, FOLLOW THE FIREARM OPERATOR'S MANUAL TO ENSURE THE FIREARM IS UNLOADED AND CLEARED. KEEP FIREARM POINTED IN A SAFE DIRECTION.

BATTERY INSTALLATION OR REMOVAL

Remove bezel by unscrewing it counterclockwise from the flashlight.

BATTERY INSTALLATION OR REMOVAL – CONTINUED

Insert a fresh CR123A lithium battery into the battery compartment of the flashlight, positive (+) end first. Replace the bezel and turn it clockwise until fully tightened.

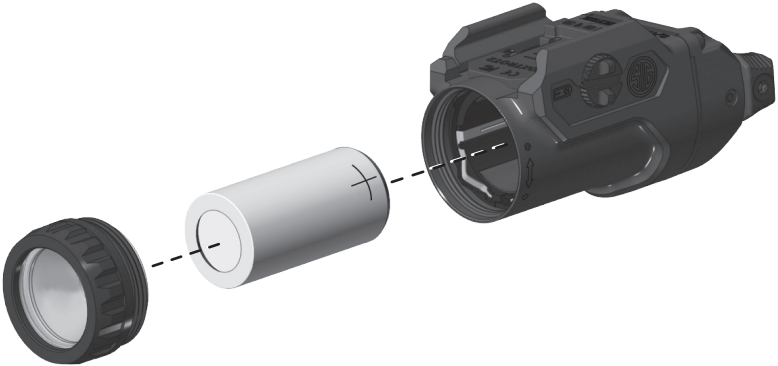

SELECTING THE PROPER RAIL INTERFACE INSERT

The FOXTROT2 comes with 2 sliding rail interface inserts. One is marked M1913 and is meant for any MIL-STD 1913 or similar rail. The other insert is marked OTHER and is meant for pistols with non-MIL-STD 1913 rail designs. To change out the rail interface insert, the FOXTROT2 must be completely disconnected from the rail.

1. Turn the cross bolt head clockwise with a flathead screwdriver until the small E-clip is exposed on the other end of the bolt.

SELECTING THE PROPER RAIL INTERFACE INSERT – CONTINUED

2. Use the included E-clip tool (with the word REMOVE face down) to push the E-clip off the end of the cross bolt, taking care not to lose the small E-clip.

3. Next, turn the cross bolt head counterclockwise until the cross bolt can be pulled completely out, taking care not to lose the wave spring that is on the cross bolt, or the rail mount keeper.
4. Test both rail interface inserts to determine which one has a recoil lug that fits securely into a slot on the firearm rail with the least amount of free play.
5. Put the correct rail interface insert into the slot on top of the light, reinsert the cross bolt with wave spring through the rail insert and thread it clockwise into the rail mount keeper.

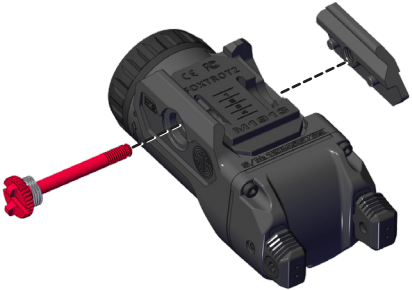

SELECTING THE PROPER RAIL INTERFACE INSERT – CONTINUED

6. Turn the cross bolt head completely clockwise to expose the groove on the end of the cross bolt. Use the E-clip tool (with the word INSTALL face down) to slide the E-clip onto the groove on the end of the cross bolt.

PADDLE INSTALLATION

The FOXTROT2 comes with four different pairs of paddles. Each paddle is marked with dots on the end for easy identification and pairing.

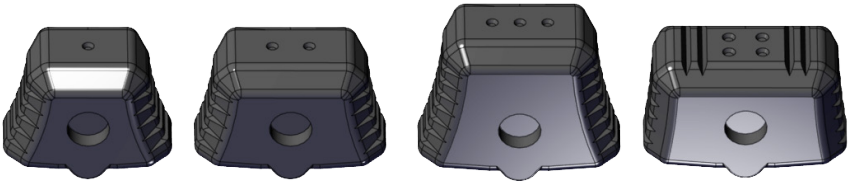

PADDLE INSTALLATION – CONTINUED

1. Remove the installed paddles on the FOXTROT2 by using the included T8 Torx wrench. To remove the screw, turn the screw in a counterclockwise direction until the screw is removed.

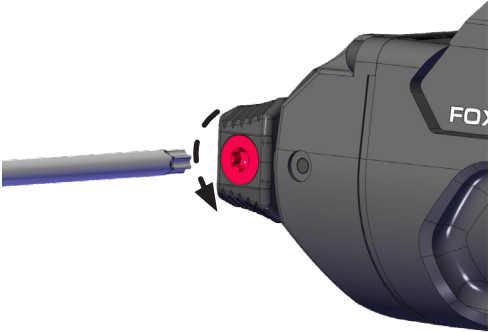

2. Select the desired paddle and slide it onto the switch post.

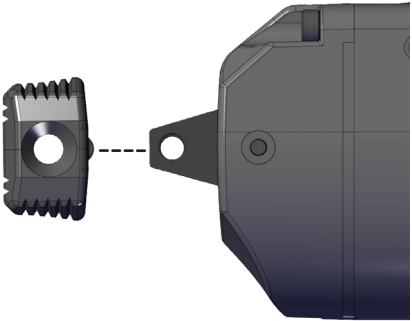

PADDLE INSTALLATION – CONTINUED

3. Once the paddle is installed, use the included T8 Torx wrench to hand tighten the screw. Be careful not to over tighten.

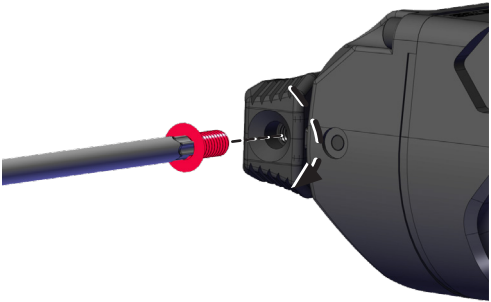

INSTALLATION

1. Use a flathead screwdriver to turn the cross bolt head counterclockwise until it is stopped by the E-clip on the end of the bolt.

INSTALLATION – CONTINUED

2. The rail interface insert can be positioned forward or back in 4 micro-adjustment positions. This provides for maximum location adjustment of the light on the rail.

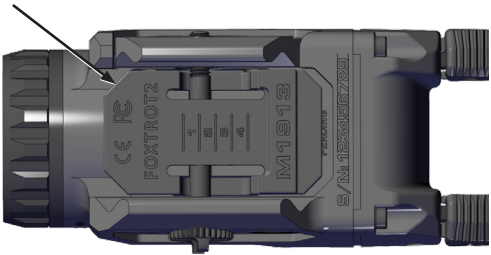

3. Press the head of the cross bolt to open up the rail clamp to it's maximum width.
4. Place the fixed side of the rail clamp against the firearm rail. Swing the light into position until the recoil lug of the rail interface insert is resting completely inside a slot in the firearm rail. Release the tension on the cross bolt head so that the rail mount keeper grabs onto the rail.

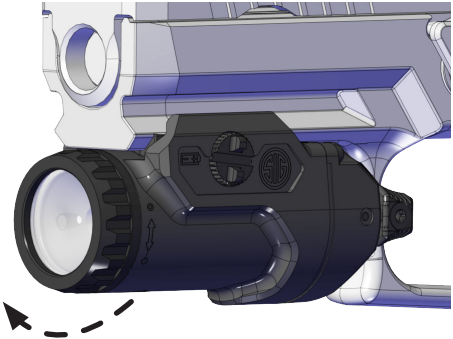

INSTALLATION – CONTINUED

5. Push forward on the FOXTROT2 (toward firearm muzzle) while turning the cross bolt head completely clockwise until the FOXTROT2 is secured onto the rail and cannot be moved forward or back.

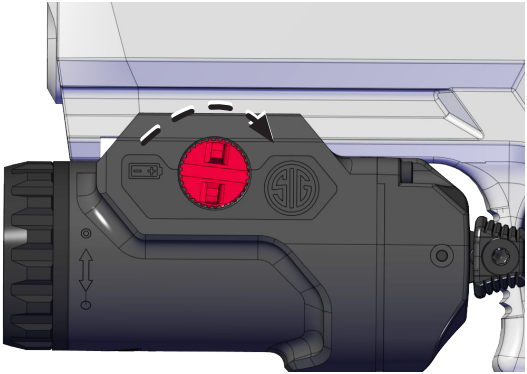

OPERATION

The FOXTROT2 is programmable with three modes of activation; momentary mode, latching mode, and threshold mode.

Momentary Mode - Momentary mode means that when you press and hold the paddle switch, the light will remain ON until you release the paddle switch.

Latching Mode - Latching mode means that when you press and release the paddle switch the light will remain ON. To turn the light OFF press and release the paddle switch again.

Threshold Mode - Threshold mode allows the user to operate the light in either Momentary or Latching mode. To enter Latching mode push and release the paddle switch within .25 second (immediately). To turn the light OFF press and release the paddle switch again. To enter Momentary mode press and hold the paddle switch for more than .25 second and the light will remain in the ON position until you release the paddle switch.

To program the FOXTROT2 turn the light off, then push and hold both switch paddles up for five seconds. When paddles are held in the up position the light will blink once for Mode 1, twice for Mode 2, and three times for Mode 3. When the desired mode is indicated, release the paddles.

OPERATION – CONTINUED

Mode 1:

Left & Right Paddle – Push down on paddle for momentary mode, Push up on paddle for latching mode.

Mode 2:

Left & Right Paddle - Push up or down on paddle for latching mode.

Mode 3:

Left & Right Paddle - Push down on paddle for threshold mode; push and release within .25 second and light will enter latching mode, hold paddle in down position for longer than .25 seconds and light will enter momentary mode. Push up on paddle for latching mode.

The FOXTROT2 contains a lockout feature, to prevent unintended activation of the light during storage or transport when a battery is installed. Turn the bezel approximately 1/4 turn counterclockwise. Press either paddle, to determine if the lockout feature is properly set. The light should not turn on. If it does, continue turning the bezel counterclockwise until the light turns off.

The FOXTROT2 will produce its peak brightness output upon initial activation, when using a fresh battery. If left on continuously, the light will get very warm and the brightness will gradually taper down over time, but will continue to produce usable levels of light for over 1 hour, or until a fresh battery is installed.

CLEANING AND MAINTENANCE

After repeated firing, the lens may become clouded with gunpowder residue. For best results, it is recommended that this area be cleaned, along with the firearm, after each use. To clean the lens, follow these steps:

1. Keep firearm pointed in a safe direction
2. Ensure firearm is unloaded and cleared
3. Confirm light is off
4. In a small circular pattern use a soft, degreased, lint-free cloth to clean the lens. Be sure to clean around lens edge.
5. Apply dampened swab to lens and polish in a small circular pattern. Be sure to clean around lens edge.

Firearm should be cleaned and lubricated exactly as directed in your firearm owner's manual. Excess lubrication can interfere with the proper function of both firearm and FOXTROT2 Pistol Mounted White Light. The FOXTROT2 Pistol Mounted White Light should never be submerged or flushed with cleaning solvents.

FOXTROT2™	SPECIFICATIONS
Dimensions	2.76” L x 1.18” W x 1.3” H
Weight without battery	1.98 oz
Peak Lumen Output	580
Battery	(1) CR123A Lithium
Activation Switch Type	Ambidextrous Activation Paddles with Momentary Mode, Latching Mode, and Threshold Mode
Water Resistance	IPX7

WARNING: CANCER AND REPRODUCTIVE HARM—www.P65warnings.ca.gov

NOTICE: Export restrictions may apply – This product may be controlled either by the ITAR or EAR.

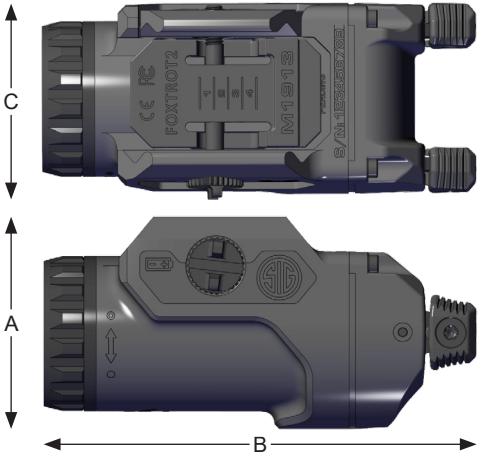

A – 1.3 in

B – 2.76 in

C – 1.18 in

SIG SAUER ELECTRO-OPTICS INFINITE GUARANTEE ®/ LIMITED LIFETIME WARRANTY

SIG SAUER® has manufactured the most rugged, dependable, high-performance firearms for more than two centuries. Our heritage of design, engineering, and precision-manufactured quality predates the existence of any other optics company worldwide. We understand the importance of quality in the line of fire, at the shooting range or on your next hunt. SIG SAUER Electro-Optics had to earn the right to wear that badge and the Infinite Guarantee has your back, forever. Period.

We will repair or replace your SIG SAUER product in the event it becomes damaged or defective, at no charge to you. If we cannot repair your product, we will replace it with a product in perfect working order of equal or better physical condition.

SIG SAUER® Infinite Guarantee®

- Unlimited Lifetime Guarantee
- Fully Transferable
- No Warranty Card Required
- No Receipt Required
- No Time Limit Applies
- No Charge

Please note that our Infinite Guarantee excludes coverage for intentional damage, misuse, cosmetic damage that does not affect the performance of the optic, loss, theft, or unauthorized repair or modification. Excludes electronic and Tritium components.

Customers seeking warranty coverage must first obtain a Return Merchandise Authorization (RMA) by contacting SIG SAUER Customer Service, and return the product unloaded and freight prepaid.

ANY WARRANTIES IMPLIED BY LAW, INCLUDING ANY IMPLIED WARRANTIES OF MERCHANTABILITY OR FITNESS FOR A PARTICULAR PURPOSE, ARE EXPRESSLY DISCLAIMED. REPAIR, ALTERATION, OR REPLACEMENT AS PROVIDED HEREIN IS YOUR EXCLUSIVE REMEDY FOR ANY DEFECTIVE PRODUCT. IN NO EVENT SHALL SIG SAUER OR ANY COMPANY AFFILIATED WITH SIG SAUER BE LIABLE FOR ANY SPECIAL, INCIDENTAL, OR CONSEQUENTIAL DAMAGES OF ANY KIND ARISING OUT OF THE PURCHASE OR USE OF THIS PRODUCT, WHETHER BASED UPON CONTRACT, TORT, STATUTE, OR OTHERWISE. Some states do not allow the exclusion or limitation of implied warranties, or the exclusion or limitation of incidental or consequential damages, so some or all of the above limitations or exclusions may not apply to you. This warranty gives you specific legal rights, and you may also have other rights which vary from State to State.

THIS WARRANTY APPLIES TO COMMERCIAL CUSTOMERS ONLY, AND DOES NOT APPLY TO GOVERNMENT, MILITARY, LAW ENFORCEMENT, OR NON-US CUSTOMERS. NON-US COMMERCIAL CUSTOMERS MUST PURCHASE PRODUCT THROUGH AN AUTHORIZED SIG SAUER DEALER WITHIN THEIR COUNTRY OF RESIDENCE FOR THIS WARRANTY TO APPLY.

SIG SAUER® ELECTRONIC COMPONENT LIMITED 5-YEAR WARRANTY

SIG SAUER warrants that the electronic and tritium components of the enclosed product were originally manufactured free of defects in workmanship, material, and mechanical function. For a period of five (5) years from the date of manufacture, SIG SAUER agrees to correct any defect in these components by repair, adjustment, or replacement, at SIG SAUER's option, with the same or comparable quality components (or by replacing the product at SIG SAUER's option); provided however that a Return Merchandise Authorization (RMA) is first obtained by contacting SIG SAUER Customer Service, and that the product is returned unloaded and freight prepaid.

This limited warranty is null and void if the product has been misused, damaged (by accident or otherwise), damaged through failure to provide reasonable and necessary maintenance as described in the user's manual, or if unauthorized repair or any alteration, including of a cosmetic nature, has been performed on the product. This limited warranty does not apply to normal cosmetic wear and tear of any parts.

ANY WARRANTIES IMPLIED BY LAW, INCLUDING ANY IMPLIED WARRANTIES OF MERCHANTABILITY OR FITNESS FOR A PARTICULAR PURPOSE, ARE EXPRESSLY DISCLAIMED. REPAIR, ALTERATION, OR REPLACEMENT AS PROVIDED HEREIN IS YOUR EXCLUSIVE REMEDY FOR ANY DEFECTIVE PRODUCT. IN NO EVENT SHALL SIG SAUER OR ANY COMPANY AFFILIATED WITH SIG SAUER BE LIABLE FOR ANY SPECIAL, INCIDENTAL, OR CONSEQUENTIAL DAMAGES OF ANY KIND ARISING OUT OF THE PURCHASE OR USE OF THIS PRODUCT, WHETHER BASED UPON CONTRACT, TORT, STATUTE, OR OTHERWISE.

Some states do not allow the exclusion or limitation of implied warranties, or the exclusion or limitation of incidental or consequential damages, so some or all of the above limitations or exclusions may not apply to you. This warranty gives you specific legal rights, and you may also have other rights which vary from State to State.

THIS WARRANTY APPLIES TO COMMERCIAL CUSTOMERS ONLY, AND DOES NOT APPLY TO GOVERNMENT, MILITARY, LAW ENFORCEMENT, OR NON-US CUSTOMERS. NON-US COMMERCIAL CUSTOMERS MUST PURCHASE PRODUCT THROUGH AN AUTHORIZED SIG SAUER DEALER WITHIN THEIR COUNTRY OF RESIDENCE FOR THIS WARRANTY TO APPLY.

NOTES:

NOTES:

sigsauer.com

FOR PRODUCT SERVICE ON THIS MODEL, PLEASE CALL 603-610-3000

27100 SW Parkway Avenue, Wilsonville, Oregon 97070 USA

©2021 SIG SAUER, Inc. All rights reserved.

AN ISO 9001 REGISTERED COMPANY

P/N 7403472-01 REV01